NHS
Birmingham Women's and Children's
NHS Foundation Trust

Information leaflet for patients and families

Marfan Syndrome



What is Marfan syndrome?

Marfan syndrome is an inherited condition which can affect many parts of the body including the skeleton, lungs, eyes, heart and blood vessels. The condition is caused by a change in the gene which makes fibrillin. Fibrillin is a fine fibre which acts like a scaffolding within 'connective tissue' throughout the body.

Marfan syndrome affects men, women and children of all ethnic backgrounds. About 1 in 5000 people in the UK has Marfan syndrome.

How is Marfan syndrome passed on in families?

In 75% of cases, the gene change that causes Marfan syndrome is inherited from a parent. Each child of a person with Marfan syndrome has a 50:50 (1 in 2) chance of inheriting the condition. This is the same for boys or girls.

Autosomal dominant inheritance: one parent is affected

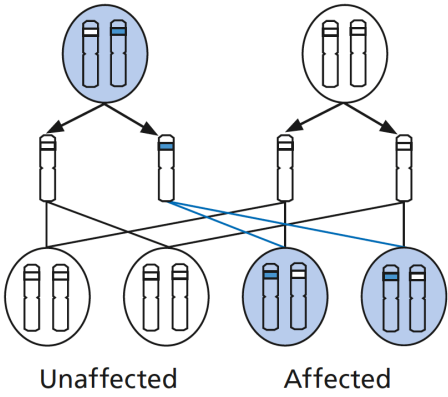

In 25% of people who have Marfan syndrome, neither of their parents has the condition. This is because the gene change has occurred in that person for the first time. In this situation, the unaffected parents have a very low chance of having another child with Marfan syndrome. If appropriate we will assess family members.

How is Marfan syndrome diagnosed?

Marfan syndrome is diagnosed by looking at a person's medical history and examining them. Other tests are often arranged. These may include an eye test and an ultrasound of the heart. Looking into the family history further, may also be helpful. Sometimes we may organise a genetic test to help make a diagnosis.

What medical problems may happen in Marfan syndrome?

A number of medical problems can occur in Marfan syndrome. Marfan syndrome is very variable, even within families. It is unusual for one person to have all of these problems.

Heart and blood vessels

The most serious problems in Marfan syndrome involve the heart and blood vessels.

The main blood vessel (aorta) and one of the heart valves may be weakened in Marfan syndrome. People are often unaware of these changes.

Eyes

People with Marfan syndrome are often short sighted. Sometimes the lens of the eye or the lining of the back of the eye may move out of place. This may result in blurred or disturbed vision.

Skeleton

People with Marfan syndrome are often tall and have long fingers and toes. Joints can be loose and sometimes painful. Sometimes people can develop a curve in their spine (scoliosis) or have an unusually shaped breast bone.

Lung

Sometimes a lung can suddenly collapse (pneumothorax). This causes breathlessness.

During Pregnancy

Women with Marfan Syndrome may need extra heart checks in pregnancy. Some couples might want testing in pregnancy, genetic testing is required for this.

How do we look after people with Marfan syndrome?

There is no cure for Marfan syndrome. However, careful medical care reduces the risk of serious problems.

You may need regular check ups by eye and heart doctors. You may be given medical treatment to lower blood pressure and protect the heart. Sometimes surgical

treatment may be needed. The problems that can happen in Marfan syndrome, and risks and benefits of treatments will be discussed with you.

You will be asked to avoid heavy exercise and contact sports. This will help to avoid risk of injury to your heart, blood vessels and eyes. You will also have regular examinations to check for curvature of the spine.

Research studies are trying to identify treatments which may help in preventing or slowing the major heart complications and you can discuss this with you doctors.

There are other conditions which show similar features to Marfan's Syndrome. We will consider these and discuss where appropriate.

For further information contact the:

The Marfan Association UK
Rochester House
5 Aldershot Road
Fleet, Hampshire
GU15 3NG

Telephone: 01252 810472
Fax: 01252 810473
Website: http://marfan.org.uk
E-mail: support@marfan.org.uk

With thanks to the Clinical Genetics Unit, Guy's and St. Thomas' Hospital, London

If you need more advice please contact:

Clinical Genetics Unit
Birmingham Women's and Children's
NHS Foundation Trust
Mindelsohn Way, Edgbaston,
Birmingham B15 2TG

Telephone: 0121 335 8024
Email: genetics.info@nhs.net

Birmingham Women's and Children's
NHS Foundation Trust
Mindelsohn Way, Edgbaston
Birmingham B15 2TG

Author: Clinical Genetics Unit
Produced: June 2017
Review Date: June 2020
Ref No: GG9

